# ACTUATORS

ROLLCO

SPECIALIZED
ON LINEAR MOTION

# Index


Multiple applications ..... 3

**Industrial actuators:**

ID10 ACME Series ..... 4-5

ID10 Ball Screws Series ..... 6-7

LD3 Series ..... 8-9

**Furniture actuators:**

FD Series ..... 10-11

**Medical actuators:**

MD60 Series ..... 12-13

MD7 Series ..... 14-15

**Control box:**

MD6C Control Box ..... 16

MD7C Control Box ..... 16

T Control Box ..... 17

**Handset:**

HC, HD, HF & HT ..... 18

Product overview ..... 19




# Multiple Applications

# ID10 ACME Series

### Specifications:

- Input: 12/24 VDC
- Max Load: 3500 N
- Max Speed: 33,5 mm/sec
- Stroke length: 102, 153, 203, 254, 305, 457, 610
- Gear Ratio: 10:1, 20:1, 40:1
- Steel extension tube
- Working temperature: -25°C to +65°C
- Static load capacity: 4500N
- ACME screw
- Powder metallurgy gears
- No back driving
- Overload protection by clutch
- Duty cycle: 25%
- Protection: IP54

**Standard** **Potentiometer/Limit switches**

### Options:

- Potentiometer
- Adjustable limit switches
- Manual Drive by Hand Crank
- Protection: IP65

| Gear Ratio | Max push | Max pull | Speed at No load | Speed at full load | Stroke | Voltage |
|---|---|---|---|---|---|---|
| | N | | mm/s | | mm | VDC |
| 10:1 | 1500 | 1500 | 33,5 | 26,7 | 102-610 | 12/24 |
| 20:1 | 2500 | 2500 | 17 | 14,3 | 102-610 | 12/24 |
| 40:1 | 3500 | 3500 | 8,4 | 7,4 | 102-610 | 12/24 |

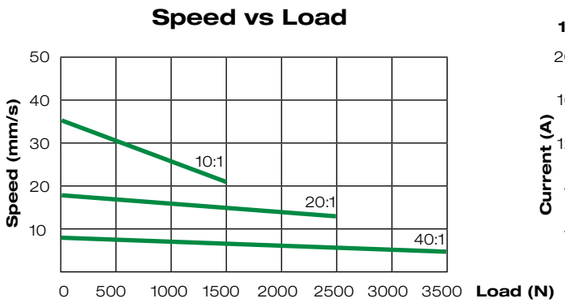


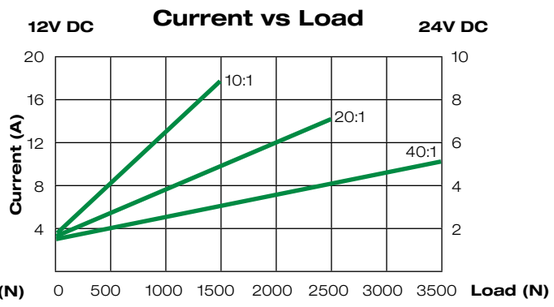




ID10 ACME - INDUSTRIAL SERIES

### Standard

| Stroke (± 2,5 mm) | 102 | 153 | 203 | 254 | 305 | 457 | 610 |
|---|---|---|---|---|---|---|---|
| Retracted length (A ± 3,8 mm) | 262 | 313 | 364 | 414 | 465 | 668 | 821 |

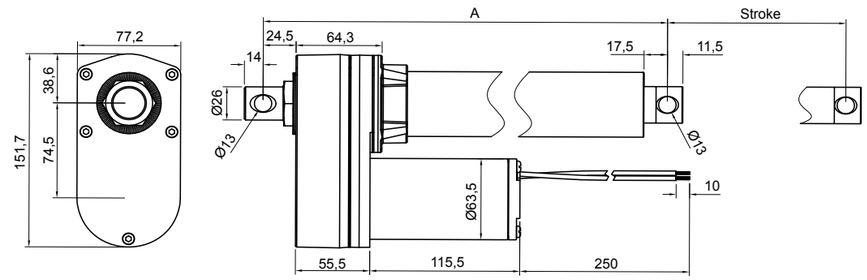


### With Limit Switches or Limit Switches+Potentiometer

| Stroke (± 5 mm) | 102 | 153 | 203 | 254 | 305 | 457 | 610 |
|---|---|---|---|---|---|---|---|
| Retracted length (A ± 5 mm) | 359 | 410 | 460 | 511 | 613 | 765 | 918 |

Note: The actuator with limit switch will need a buffer up to 13 mm

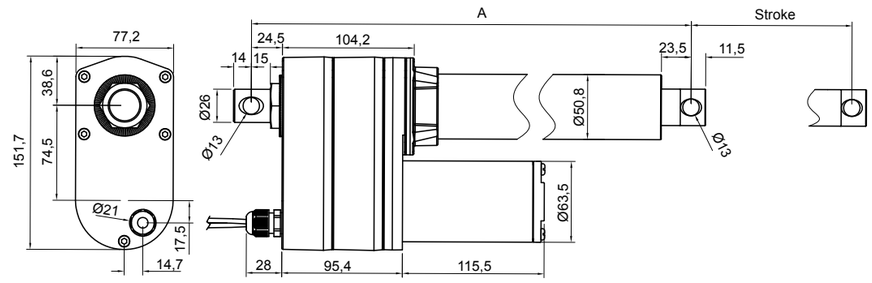


### Order Code

**ID10 -** **24 -** **20 -** **A -** **102 -** **LT.POT.MD...**

**Voltage**
12-12V DC
24-24V DC

**Gear Ratio**
10-10:1
20-20:1
40-40:1

**A:** Acme
**B:** Ball Screw

**Stroke (mm)**
102
153
203
254
305
457
610

**LT:** Limit switch
**POT:** Potentiometer
**MD:** Manual Drive
**IP65**

# ID10 Ball Screws Series

### Specifications:

- Input: 12/24 VDC
- Max Load: 7000 N
- Max Speed: 67 mm/sec
- Stroke length: 102, 153, 203, 254, 305, 457, 610 mm
- Gear Ratio: 5:1, 10:1, 20:1, 30:1, 40:1
- Stainless steel extension tube
- High efficiency ball screw
- Working temperature: -25°C to +65°C
- Static load capacity: 13600N
- No back driving
- Overload protection by clutch
- Powder metallurgy gears
- Duty cycle: 25%
- Protection: IP54

**Standard** **Potentiometer/Limit switches**

### Options:

- Potentiometer
- Adjustable limit switches
- Protection: IP65
- Manual drive by hand crank

| Gear Ratio | Max push | Max pull | Speed at No load | Speed at full load | Stroke | Voltage |
|---|---|---|---|---|---|---|
| | N | | mm/s | | mm | VDC |
| 5:1 | 2500 | 2500 | 67 | 47 | 102-610 | 12/24 |
| 10:1 | 3500 | 3500 | 33,5 | 26,7 | 102-610 | 12/24 |
| 20:1 | 4500 | 4500 | 17 | 14,3 | 102-610 | 12/24 |
| 30:1 | 6000 | 6000 | 11 | 10 | 102-610 | 12/24 |
| 40:1 | 7000 | 7000 | 8,4 | 7,4 | 102-610 | 12/24 |

### Speed vs Load

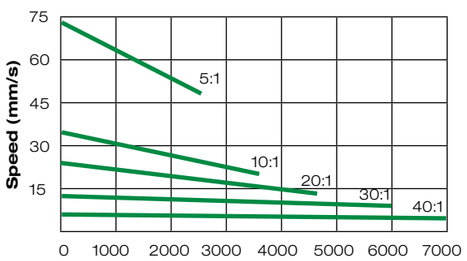


### Current vs Load

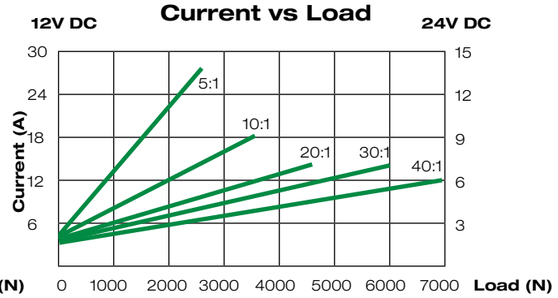




ID10 BALL SCREWS - INDUSTRIAL SERIES

### Standard

| Stroke (± 2,5 mm) | 102 | 153 | 203 | 254 | 305 | 457 | 610 |
|---|---|---|---|---|---|---|---|
| Retracted length (A ± 3,8 mm) | 302 | 353 | 404 | 455 | 506 | 735 | 888 |

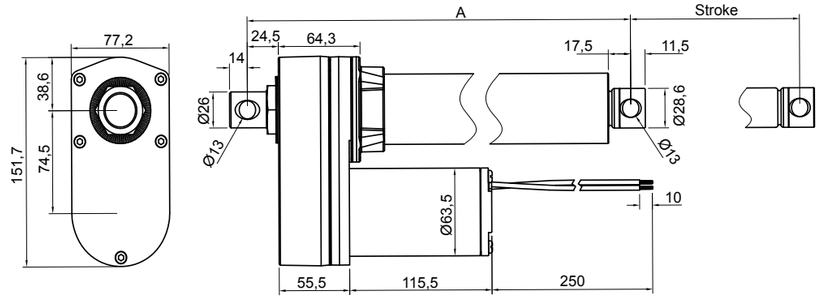


### With Limit Switches or Limit Switches+Potentiometer

| Stroke (± 5 mm) | 102 | 153 | 203 | 254 | 305 | 457 | 610 |
|---|---|---|---|---|---|---|---|
| Retracted length (A ± 5 mm) | 399 | 450 | 501 | 552 | 680 | 832 | 985 |

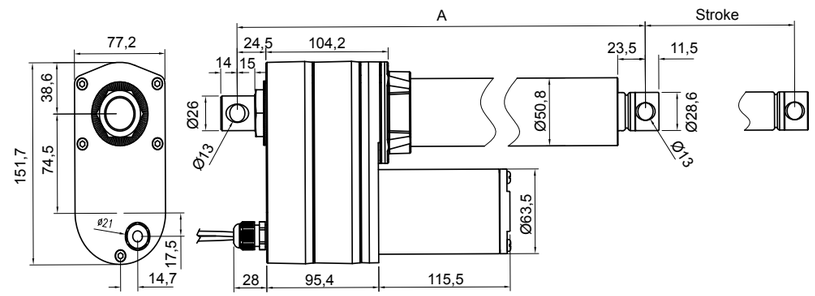


### Order Code

| ID10 - | 24 - | 20 - | B - | 153 - | LT.POT.MD... |
|---|---|---|---|---|---|
| | **Voltage** | **Gear Ratio** | **A:** Acme | **Stroke (mm)** | **LT:** Limit switch |
| | 12-12V DC | 5-5:1 | **B:** Ball Screw | 102 | **POT:** Potentiometer |
| | 24-24V DC | 10-10:1 | | 153 | **MD:** Manual Drive |
| | | 20-20:1 | | 203 | **IP65** |
| | | 30-30:1 | | 254 | |
| | | 40-40:1 | | 305 | |
| | | | | 457 | |
| | | | | 610 | |

# LD3 Series

## Specifications:

- Input: 12/24 VDC
- Max Load: 1200 N
- Max Speed: 45 mm/sec
- Aluminium extension and outer tubes
- Clevis to clevis mounting
- Stroke: 50, 100, 150, 200, 250, 300 mm
- Duty cycle: 25%
- Environment: -26°C - 65°C
- Preset limit switches
- Gear ratio: 5:1, 10:1, 20:1, 30:1, 40:1
- Protection: IP54

## Options:

- Hall effect sensor
- Potentiometer
- IP65
- Clamp

Standard

Potentiometer

Clamp

Hall Effect

Max load
Rated load

### Speed vs Load

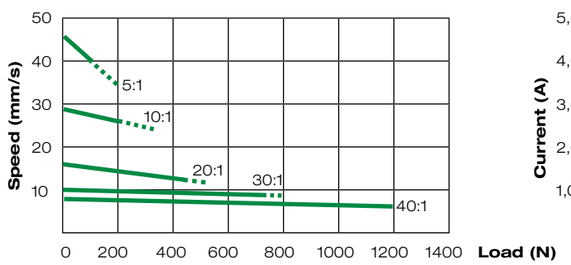


### Current vs Load

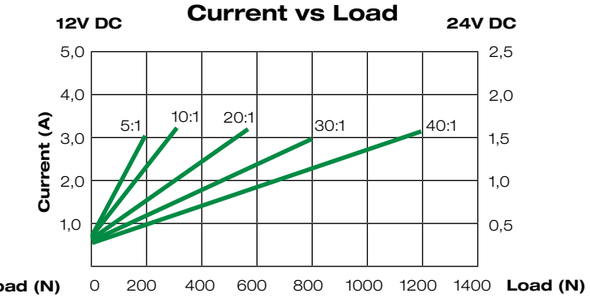


## Order Code

| LD3 - | 12 - | 20 - | 200 - | HS - | IP54.IP65.C2x |
|---|---|---|---|---|---|
| | **Voltage** | **Gear Ratio** | **Stroke (mm)** | **Option** | |
| | 12-12V DC | 5-5:1 | 50 | **HS:** Hall effect sensor | IP54 |
| | 24-24V DC | 10-10:1 | 100 | **HS2:** Dual hall effect sensors | IP65 |
| | | 20-20:1 | 150 | **POT:** Potentiometer sensor | C1x |
| | | 30-30:1 | 200 | **Clamp** | C2x |
| | | 40-40:1 | 250 | | C3x |
| | | | 300 | | |





## Standard

| Stroke (mm) | 50 | 100 | 150 | 200 | 250 | 300 |
|---|---|---|---|---|---|---|
| Retracted length A | 158 | 209 | 260 | 311 | 362 | 413 |
| Extended length B | 208 | 309 | 410 | 511 | 612 | 713 |

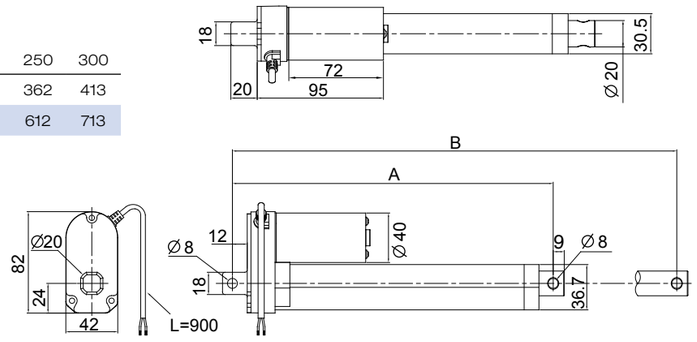


## Potentiometer

| Stroke (mm) | 50 | 100 | 150 | 200 | 250 | 300 |
|---|---|---|---|---|---|---|
| Retracted length A | 195 | 246 | 297 | 348 | 399 | 450 |
| Extended length B | 245 | 346 | 447 | 548 | 649 | 750 |

Value of POT

| Stroke(mm) | Resistance(Ω) |
|---|---|
| 50 | 0,3-9,3 K |
| 100 | 0,3-9,7 K |
| 150 | 0,3-8,6 K |
| 200 | 0,3-9,6 K |
| 250 | 0,3-9,3 K |
| 300 | 0,3-9,3 K |

Note: Tolerance ± 0,3 k

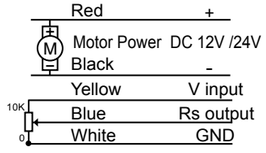


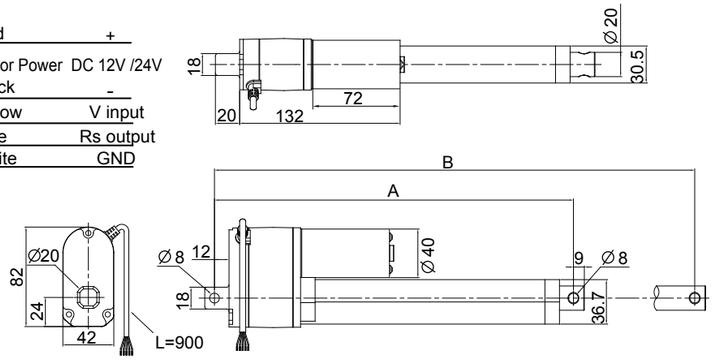


## Hall Effect

| Stroke (mm) | 50 | 100 | 150 | 200 | 250 | 300 |
|---|---|---|---|---|---|---|
| Retracted length A | 158 | 209 | 260 | 311 | 362 | 413 |
| Extended length B | 208 | 309 | 410 | 511 | 612 | 713 |

Hall Sensor

| Gear Ratio | Resolution (p/mm) |
|---|---|
| 5:1 | 2,3 |
| 10:1 | 3,6 |
| 20:1 | 6,9 |
| 30:1 | 10,6 |
| 40:1 | 14,3 |

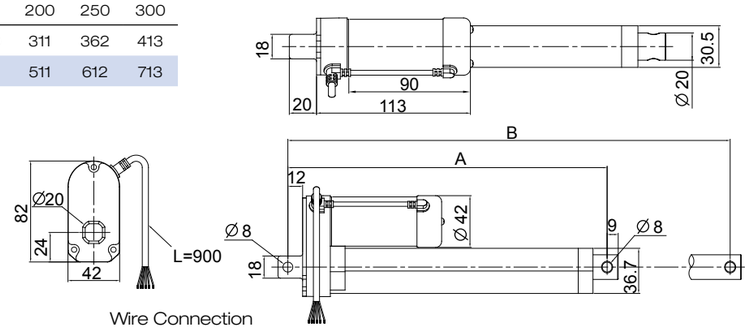


Wire Connection

Standard plug for Hall Sensor version
*Pin data2 for Hall Sensor only

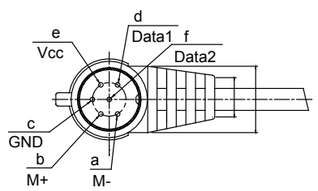


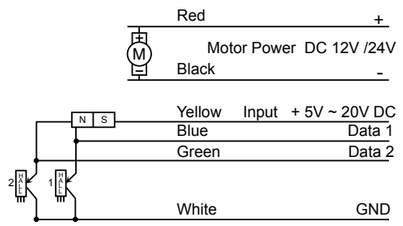


## Front Connector

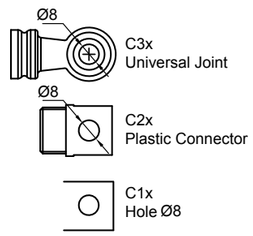

# FD Series

### Specifications:
- Input: 12/24 VDC
- Max load capacity: 6000 N (push)/4000N (pull)
- Stroke length: 50, 100, 150, 200, 300 mm (other strokes available)
- Clevis to clevis mounting
- Duty cycle: 10% or 2 min. continuous operation in 20 min.
- Low noise level
- Max speed: 16,6 mm/sec
- Aluminium extension and outer tubes
- T-control Box can be attached on the actuator

### Options:
- Hall effect sensor
- Manual drive by hand crank
- Push only
- Safety nut

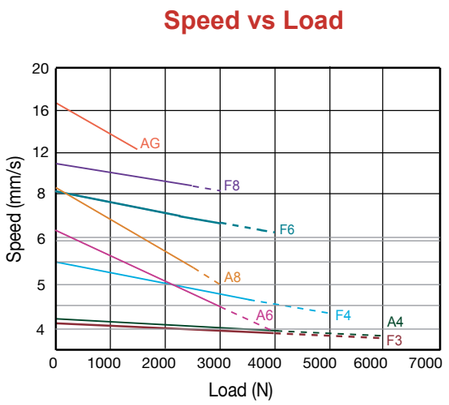


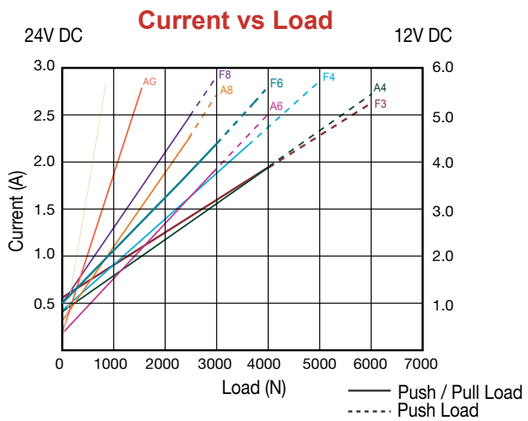


### Order Code

**FD - 24 - A4 - 228.278 - C1 2 - HS, PO, MD**

**Voltage**
12-12V DC
24-24V DC

**Speed vs load**

**A,B**
A: Retracted length
B: Extended length

Front connector

Rear connector

**Option**
HS: Hall effect sensor x1
HS2: Hall effect sensor x2
PO: Push only
MD: Manual drive





| Stroke B-A mm | 50 | 100 | 150 | 200 | 250 | 300 |
|---|---|---|---|---|---|---|
| **Front mounting C1, C5, C6, C8:** | | | | | | |
| Retracted length (A) | 228 | 278 | 338 | 388 | 448 | 498 |
| Extended length (B) | 278 | 378 | 488 | 588 | 698 | 798 |
| **Front Mounting C2, C3, C4, C7:** | | | | | | |
| Retracted length (A) | 210 | 260 | 310 | 360 | 420 | 470 |
| Extended length (B) | 260 | 360 | 460 | 560 | 670 | 770 |

### Rear Connector

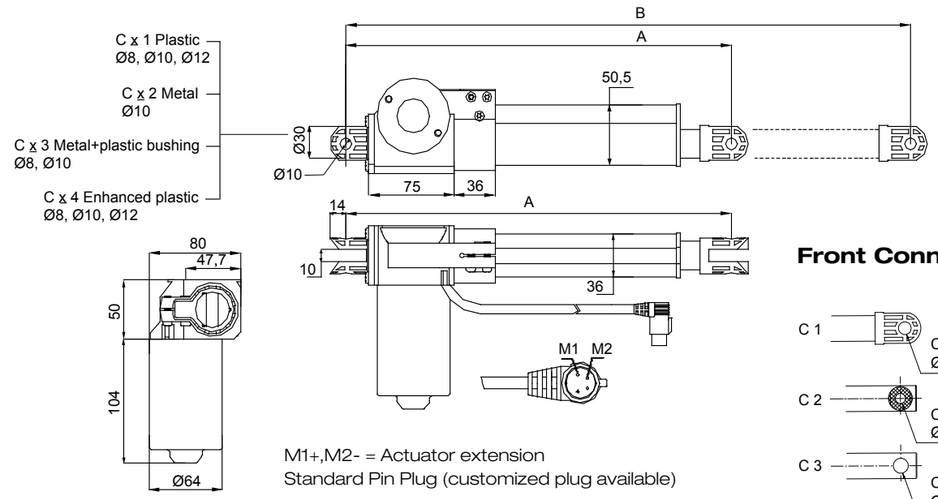


M1+,M2- = Actuator extension
Standard Pin Plug (customized plug available)

### Front Connector

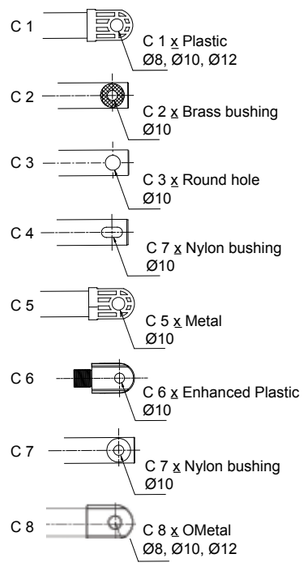


### Hall Effect Sensor

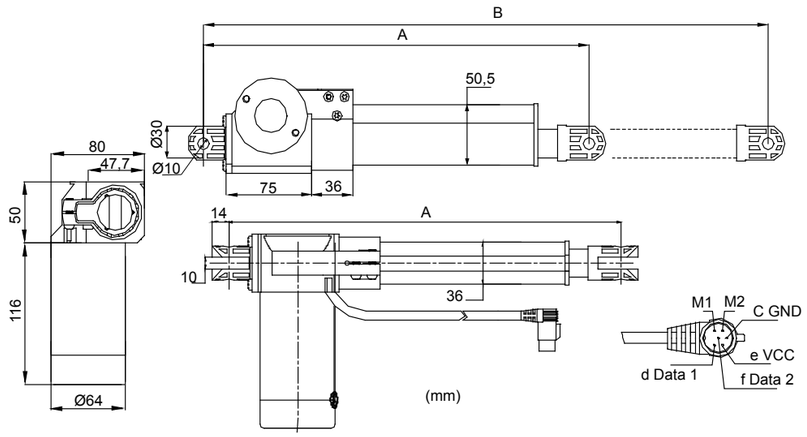


M1+,M2- = Actuator extension

MD60 - MEDICAL SERIES

# MD60 Series

## Specifications:

- Max load: 6000N (push) / 4000 (pull)
- Motor voltage: 12/24V DC
- Duty cycle: 10% or 2 min. continuous operation in 20 min.
- Max speed: 16,5 mm/sec
- Stroke: 50, 100, 150, 200, 250, 300, 350, 400 mm (other strokes available)
- IP54
- Low noise level
- Aluminium extension and outer tubes
- MD6C control box can be attached on the actuator
- One converter for up to 3 actuators

## Options:

- Quick release
- Hall effect sensor
- Push only
- Safety nut
- IP65 / IP66

| Article No. | Stroke mm | 50 | 100 | 150 | 200 | 250 | 300 | 350 | 400 |
|---|---|---|---|---|---|---|---|---|---|
| MD60 | Retracted length (A) | 234 | 274 | 324 | 374 | 424 | 474 | 524 | 574 |
| MD60 | Extended length (B) | 294 | 374 | 474 | 574 | 674 | 774 | 874 | 974 |
| MD60-QR1 | Retracted length (A) | 250 | 290 | 340 | 390 | 440 | 490 | 540 | 590 |
| MD60-QR1 | Extended length (B) | 310 | 390 | 490 | 590 | 690 | 790 | 890 | 990 |

Push load
Push/pull load

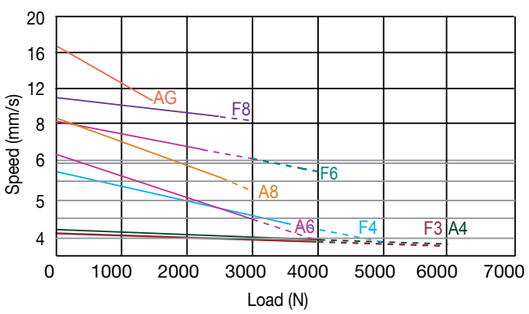


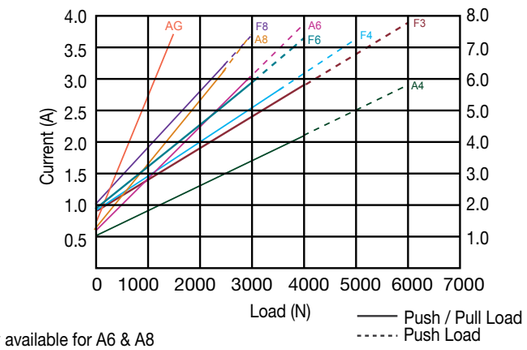


Note: MD60QR1 is only available for A6 & A8

## Dimensions MD60-QR1

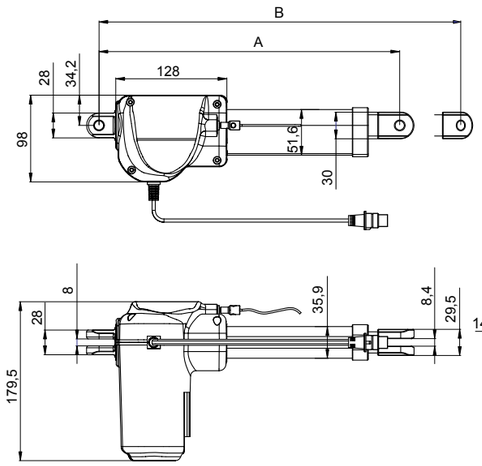


## MD60 with MD6C attached

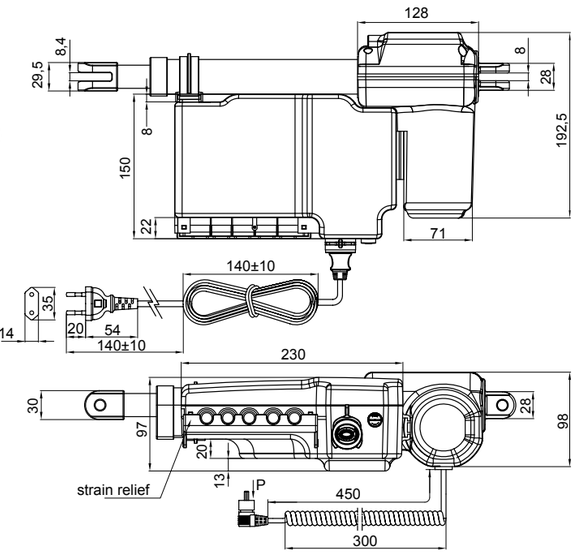


## Front Connector

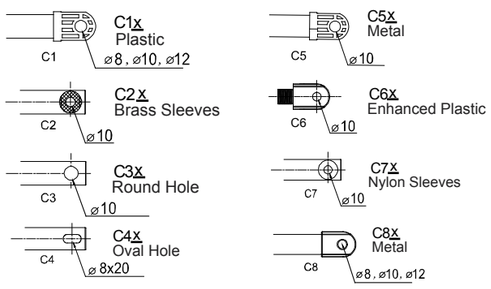


## Rear Connector

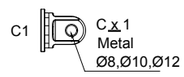


## Order Code

**MD60 - 24 - A4 - 228.288 - C8 1 - QR, HS, PO, SN**

- **Voltage** (24): 12-12V DC, 24-24V DC
- **Speed vs load** (A4)
- **A,B** (228.288): A: Retracted length, B: Extended length
- (C8): Front connector
- (1): Rear connector
- **Option** (QR, HS, PO, SN): QR1: Quick release; HS: Hall effect sensor x1; HS2: Hall effect sensor X2; PO: Push only; SN: Safety nut

MD7 - MEDICAL SERIES

# MD7 Series

### Specifications:

- Input: 12/24 V DC
- Max load capacity: 6000 N (push) / 4000N (pull)
- Stroke length: 50, 100, 150, 200, 250, 300 (mm)
- Duty cycle: 10% or 2 min. continous operation in 20 min.
- Aluminium extension and outer tubes
- Low noise level
- Speed up to 16,6 mm/sec
- IP54
- MD7C control box can be attached on the actuator
- One converter for up to 4 actuators
- Emergency lowering function with 9V DC battery x 2

### Options:

- Hall effect sensor
- Push only
- Safety nut
- Manual drive by hand crank
- IP65

## Speed vs Load

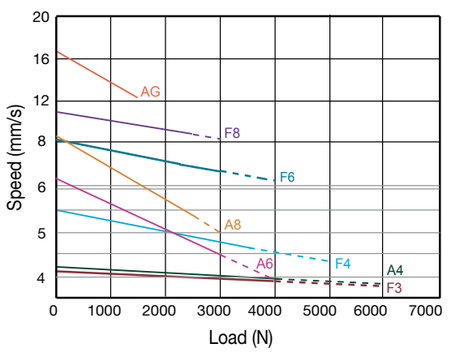


## Current vs Load

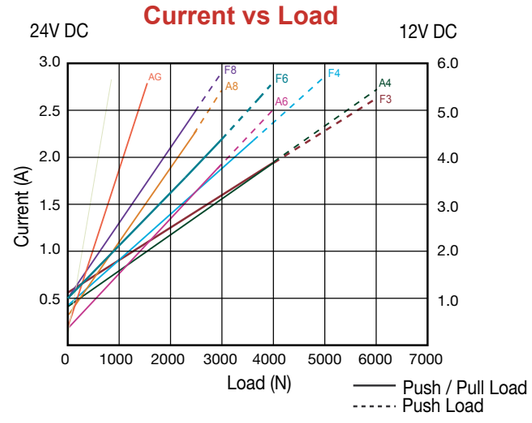


### Order Code

**MD7 - 24 - A4 - 228.278 - C5 2 - HS, PO, MD, SN**

**Voltage**
12-12V DC
24-24V DC

**Speed vs load**

**A,B**
A: Retracted length
B: Extended length

Front connector

Rear connector

**Option**
HS: Hall effect sensor x1
HS2: Hall effect sensor x2
PO: Push only
MD: Manual drive
SN: Safety nut
IP65

| Stroke mm | 50 | 100 | 150 | 200 | 250 | 300 |
|---|---|---|---|---|---|---|
| Retracted length A | 228 | 278 | 338 | 388 | 448 | 498 |
| Extended length B | 278 | 378 | 488 | 588 | 698 | 798 |

### Rear Connector

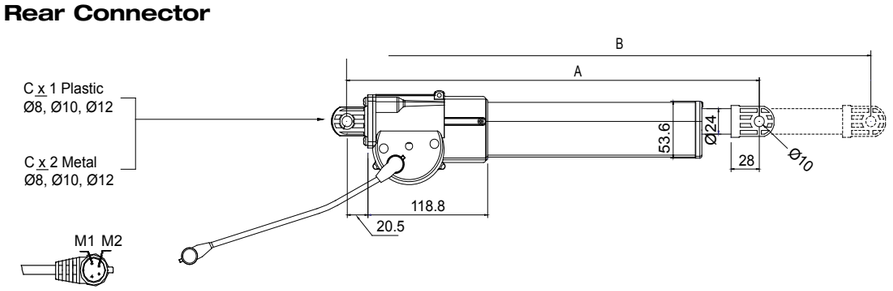


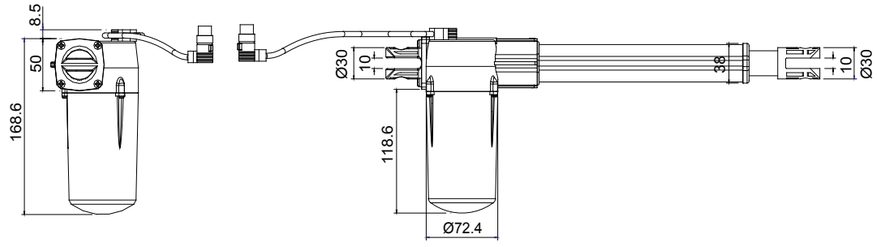


### Front Connector

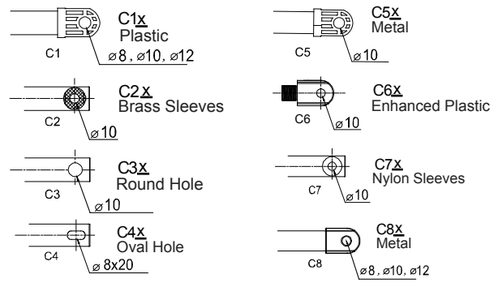


### Connection of Hall Sensor

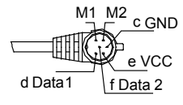

# MD6C Control Box

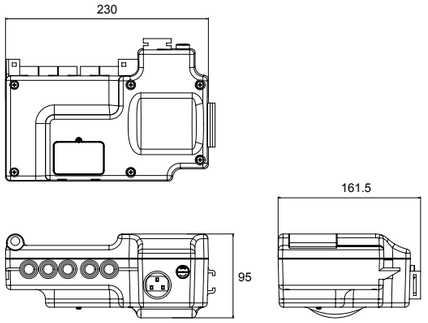


**Specifications:**
- Input: 100/120/230 V AC, 50/60 Hz
- Output: 24/12 V DC
- Max amp: 6,5 A
- Drives up to 4 actuators
- Emergency lowering function by 2 x 9 V DC batteries
- Duty cycle: 10%
- IP54

**Options:**
- IP65/IP66

**Order Code** **MD6C - 120,100 - 24 - 1 - 3**

| Input voltage | Output voltage | | |
|---|---|---|---|
| 230 V AC | 24 V DC | 1: for 1 actuator | 1: for 1 actuator |
| 120 V AC | 12 V DC | 2: for 2 actuators | 2: for 2 actuators |
| 100 V AC | | L: for 1 actuator + 1 nurse lock | 3: for 3 actuators |

# MD7C Control Box

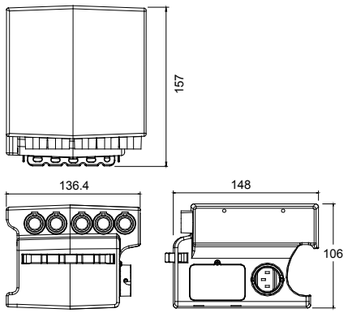


**Specifications:**
- Input: 100/120/230 V AC, 50/60 Hz
- Output: 24/12 V DC
- Max amp: 3/6 A for 1-2 actuators
  4,5/9 A for 3-4 actuators (high power version)
- Drives up to 4 actuators
- Emergency lowering function by 2 x 9 V DC batteries
- Duty cycle: 10%
- IP54

**Order Code** **MD7C - 110 - 24 - 1 - 3**

| Input voltage | Output voltage | | |
|---|---|---|---|
| 230 V AC | 24 V DC | 1: for 1 actuator | 1: for 1 actuator |
| 120 V AC | 12 V DC | 2: for 2 actuators | 2: for 2 actuators |
| 100 V AC | | L: for 1 actuator + 1 nurse lock | 3: for 3 actuators |





# T Control Box

**Specifications:**
- Input: 100/120/230 V AC, 50/60 Hz
- Output: 24/12 V DC
- Max amp: 3/6 A
- Drives up to 3 actuators
- Emergency lowering function by 2 x 9 V DC batteries
- Duty cycle: 10%

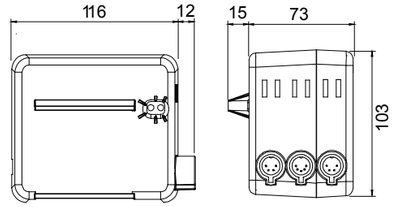


**Options:**
- Safety plug

**Order Code** **T - 100 - 24 - 1**

| Input voltage | Output voltage | |
|---|---|---|
| 230 V AC | 24 V DC | 1: for 1 actuator |
| 120 V AC | 12 V DC | 2: for 2 actuators |
| 100 V AC | | 3: for 3 actuators |

# HC

**Specifications:**
- The series include HC2, HC6, HC8 and HC10
- Combination of 2 - 10 buttons

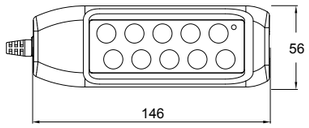


# HD

**Specifications:**
- The series include HD2, HD6 and HD8
- Combination of 2 - 8 buttons

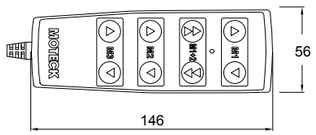


# HF

**Specifications:**
- Waterproof
- The series include HF2, HF6, HF8 and HF10
- Combination of 2 - 10 buttons
- IP54

**Option:**
Safety key

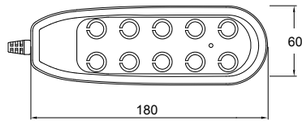


# HT

**Specifications:**
- Waterproof
- The series include HT2, HT6, HT8 and HT10
- Combination of 2 - 10 buttons
- IP54

**Option:**
- IP65
- Safety key

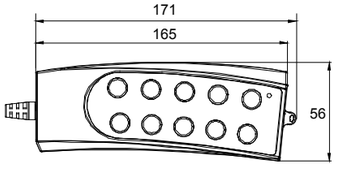


# Product Overview

**BALL SCREWS**
High effiency ball screws and nuts.

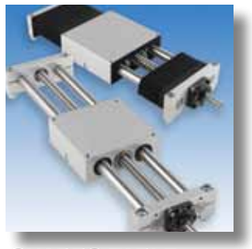

**QUADRO TABLE**
Complete linear drive unit with ball bushings and ball screws.

**LINEAR UNIT RHL**
Complete unit with tooth belt.

**LINEAR UNIT**
Complete unit with ball screw or tooth belt.

**ALUMINIUM PROFILES**
A full program of aluminium profiles and accessories.

**BELT CONVEYOR**
Transportation system with different drive options

**ACTUATORS**
Ready-to-use or customized solutions.

**ROLLERGUIDES**
Four raceways with rollers. High load capacity.

**LINEAR RAIL SYSTEM**
The most standardized linear rail system.

**MINIATURE**
Range from 3 mm up to 15 mm.

**C-RAIL**
A simple and cost effective linear bearing system

**U-RAIL**
Rollers in steel or polyamide. For light, standard or heavy load. Mounted in U-rails.

**BELLOWS**
We produce and supply bellows according to your specific needs.

**BALL BEARINGS**
Linear ball bearings and hardened steel shafts.

**LIGHT TELESCOPIC**
Telescopic systems for smooth movement. Steel and aluminium.

Every care has been taken to ensure the accuracy of the information contained in this catalogue but no liability can be accepted for any errors or omissions.
Even partial reproduction is allowed only by written permission by Rollco.

**Rollco AB**
**Box 22234**
**Ekvändan 3**
**250 24 Helsingborg**
**Sweden**
**Tel. +46 42 150040**
**Fax +46 42 150045**
**www.rollco.se**

**Rollco A/S**
**Bramdrupskovvej 15**
**6000 Kolding**
**Denmark**
**Tel. +45 7552 2666**
**Fax +45 7552 0708**
**www.rollco.dk**

**Rollco OY**
**Kuohuntie 2**
**36200 Kangasala**
**Finland**
**Tel. +358 207 57 97 90**
**Fax +358 207 57 97 99**
**www.rollco.fi**

**Rollco Norge AS**
**Bergliveien 2**
**3427 Gullaug**
**Norway**
**Tel. +47 32 84 00 34**
**Fax +47 32 84 00 91**
**www.rollco.no**

**Rollco Taiwan**
**No. 28, Lane 125, Da-an Road**
**Shulin District 238**
**New Taipei City, Taiwan**
**Tel. +886-2-8687-2726**
**Fax +886-2-8687-2720**
**www.rollco-tw.com**

Actuators - 2012-11

ROLLCO

SPECIALIZED
ON LINEAR MOTION